SmallRig

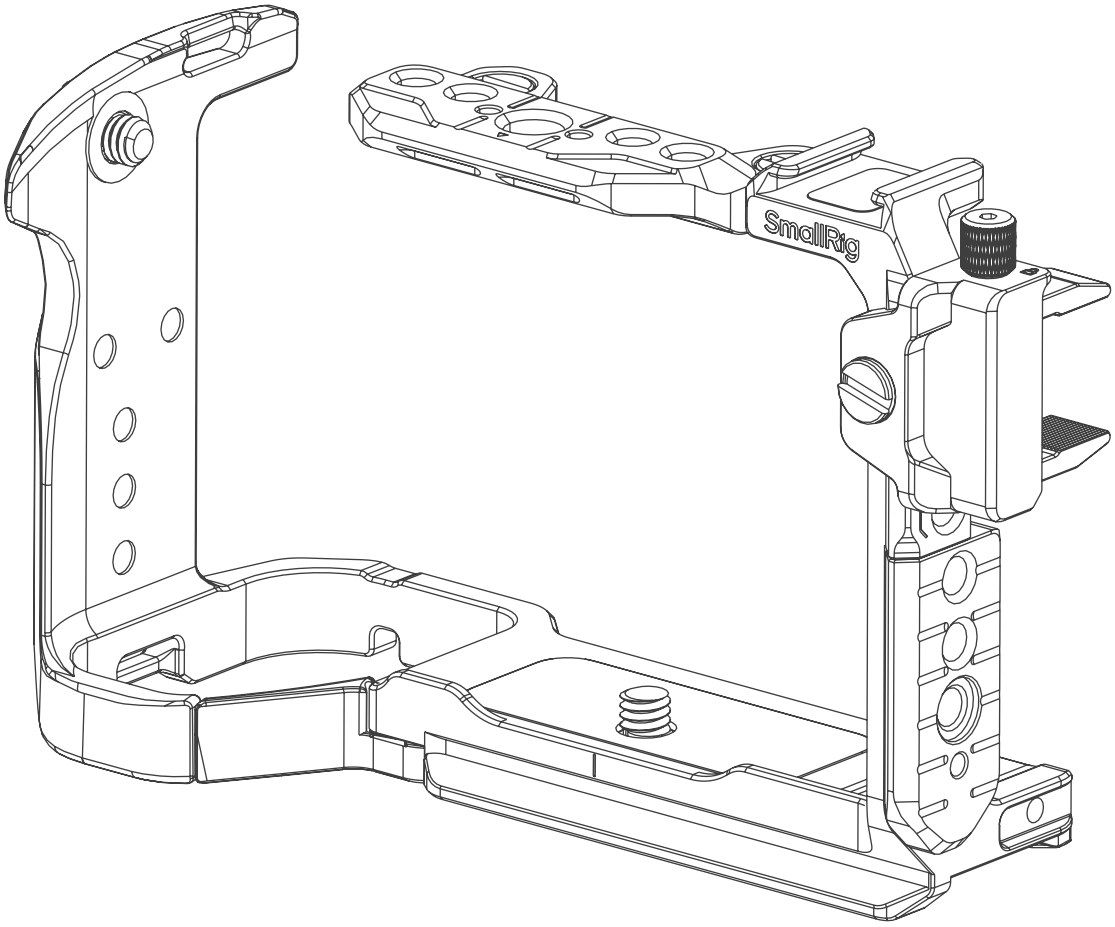

Cage for Sony FX2

全包拓展框（适用于索尼 FX2）

Operating Instruction | 操作指引

· Thank you for purchasing SmallRig's product.
感谢您购买 SmallRig 产品。

· Please read this Operating Instruction carefully.
使用本产品之前，请仔细阅读操作指引。

· Please follow the safety warnings.
请注意所有警告提示并遵循使用操作指引的所有指令。

In the Box | 包装清单

Cage 拓展框	× 1
HDMI Cable Clamp HDMI 线夹	× 1
Top Plate 顶板	× 1
Operating Instruction 操作指引	× 1

Specifications | 产品参数

Product Dimensions 产品尺寸	6.3 × 2.6 × 4.0in 159.9 × 65.8 × 100.4mm
Product Weight 产品重量	7.3 ± 0.2oz 206.0 ± 5.0g
Material(s) 主要材质	Aluminum Alloy, Stainless Steel 铝合金、不锈钢
Compatibility 兼容性	Sony FX2 索尼 FX2

Specifications subject to change without prior notice. Please refer to the physical product for the most up-to-date information.

技术参数如有改动，以实物为准，恕不另行通知。

Product Details | 产品介绍

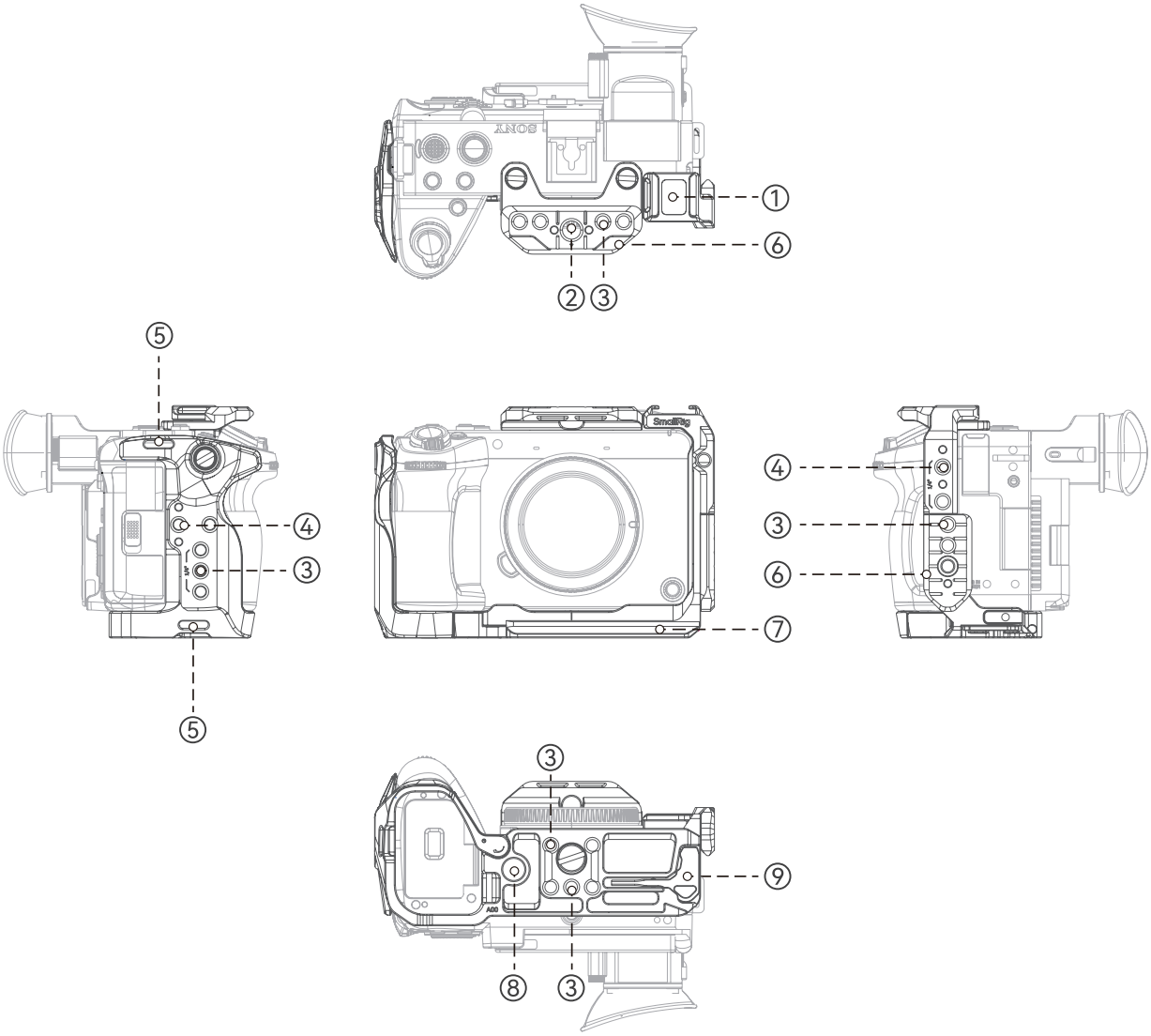

① Cold Shoe Mount
冷靴

② ARRI 3/8"-16 Locating Hole
阿莱定位孔

③ 1/4"-20 Threaded Hole
1/4"-20 螺纹孔

④ 1/4"-20 Locating Hole
1/4"-20 定位孔

⑤ Strap Slot
肩带 / 腕带接口

⑥ H21 NATO Rail
迅鹰H21滑条

⑦ H38 Arca-Swiss Plate
迅鹰H38阿卡规格快装板

⑧ QD Socket
QD 接口

⑨ Dual-Head Wrench
双头扳手

Cage Installation | 拓展框安装步骤

1

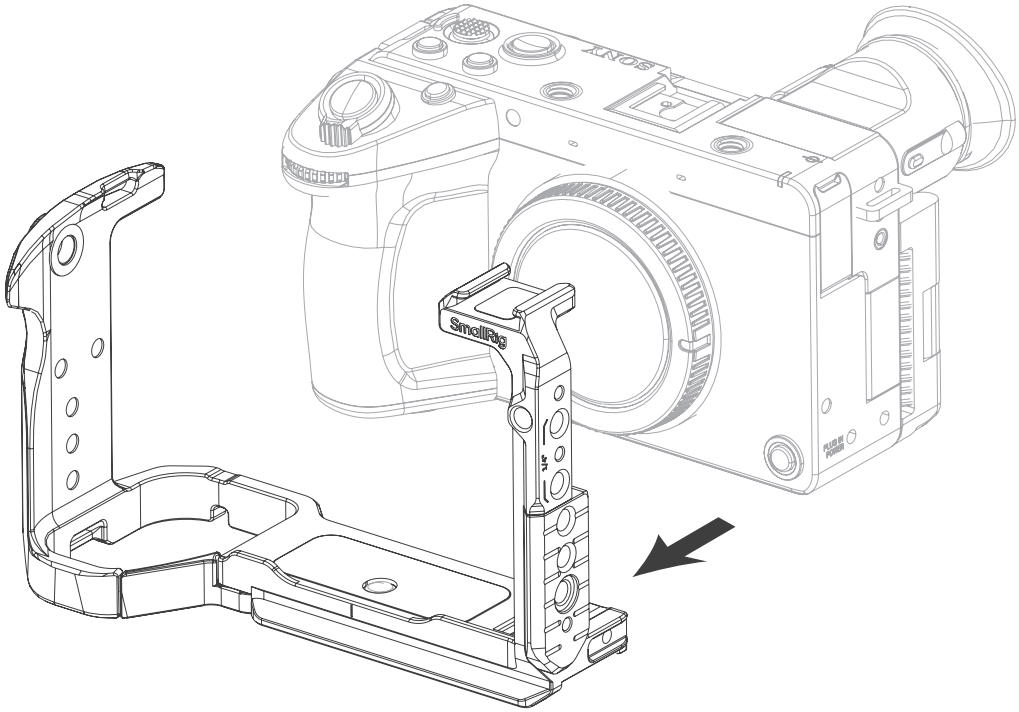

2

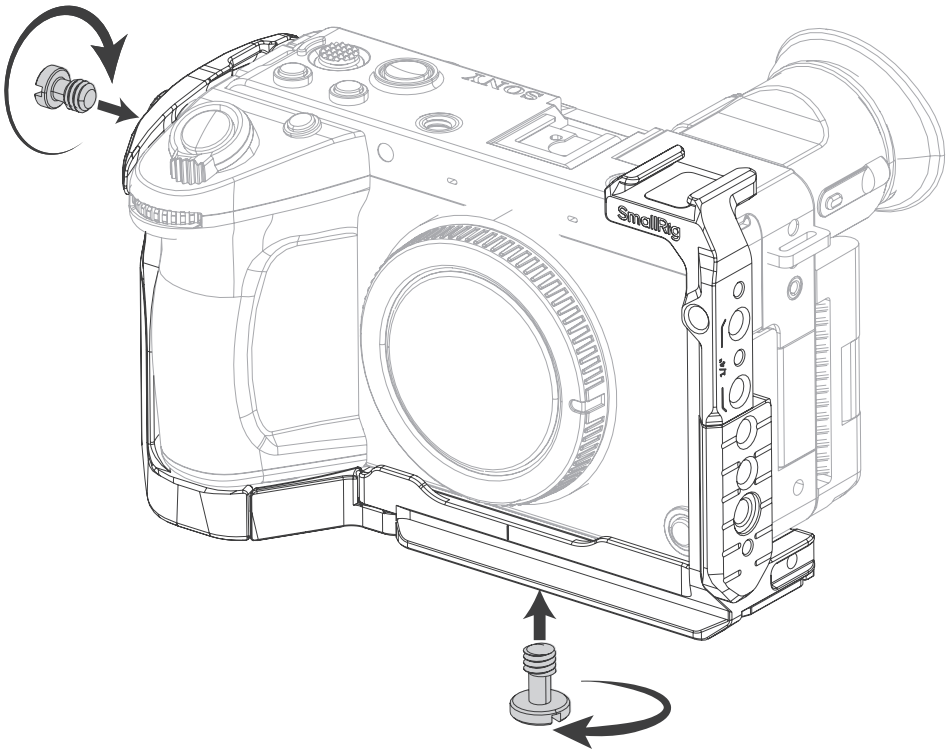

* The package does not include the camera.

* 相机机身需另购

❸

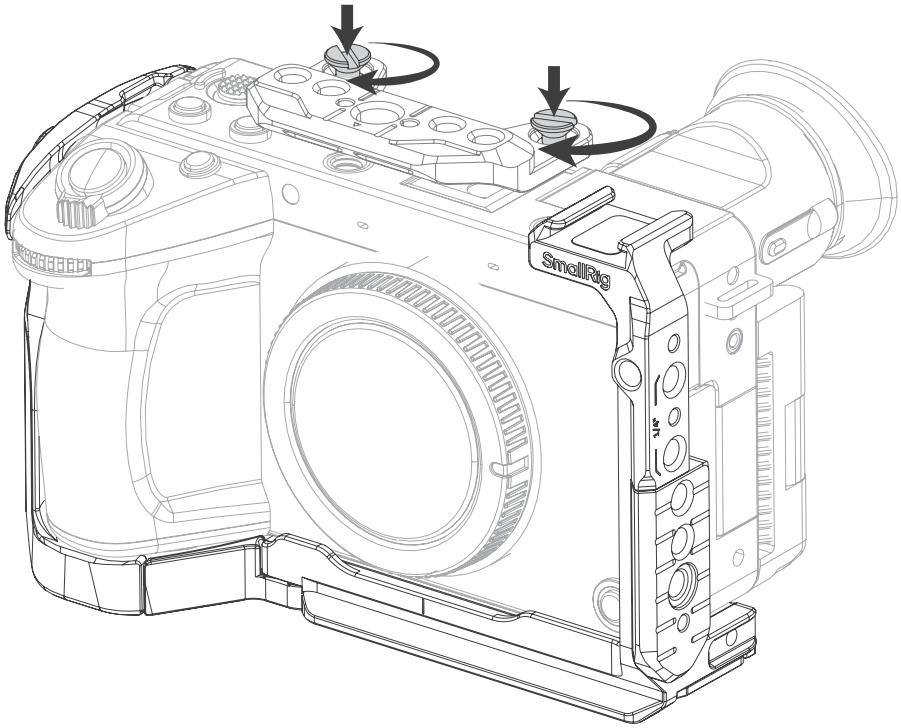

Battery Replacement | 电池更换

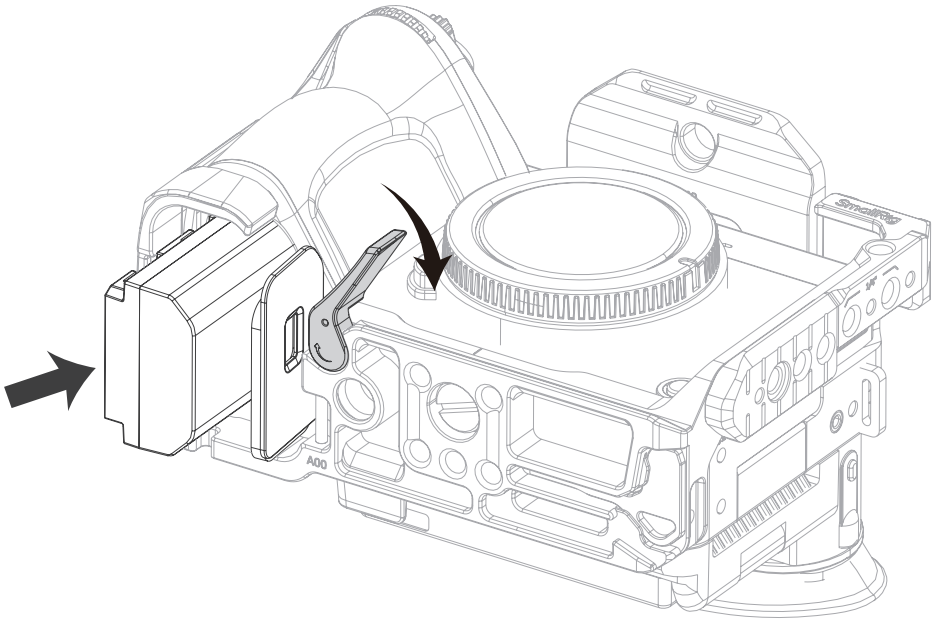

* The package does not include the camera.
* 相机机身需另购

HDMI Cable Clamp Installation | HDMI线夹安装步骤

Note: Please open the camera's HDMI cover before installing the HDMI cable clamp.
备注：在安装HDMI线夹前，请先打开相机HDMI盖子。

1

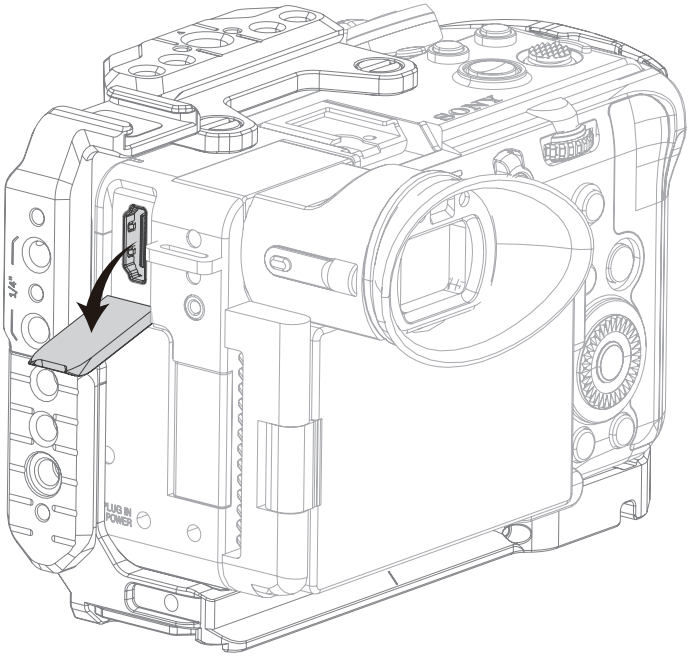

2

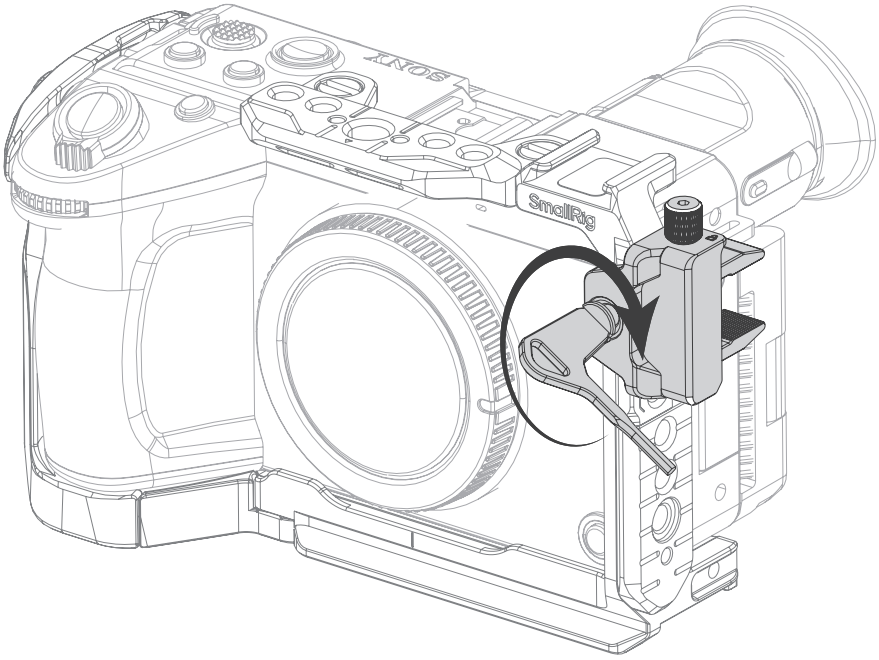

* The package does not include the camera.
* 相机机身需另购

3

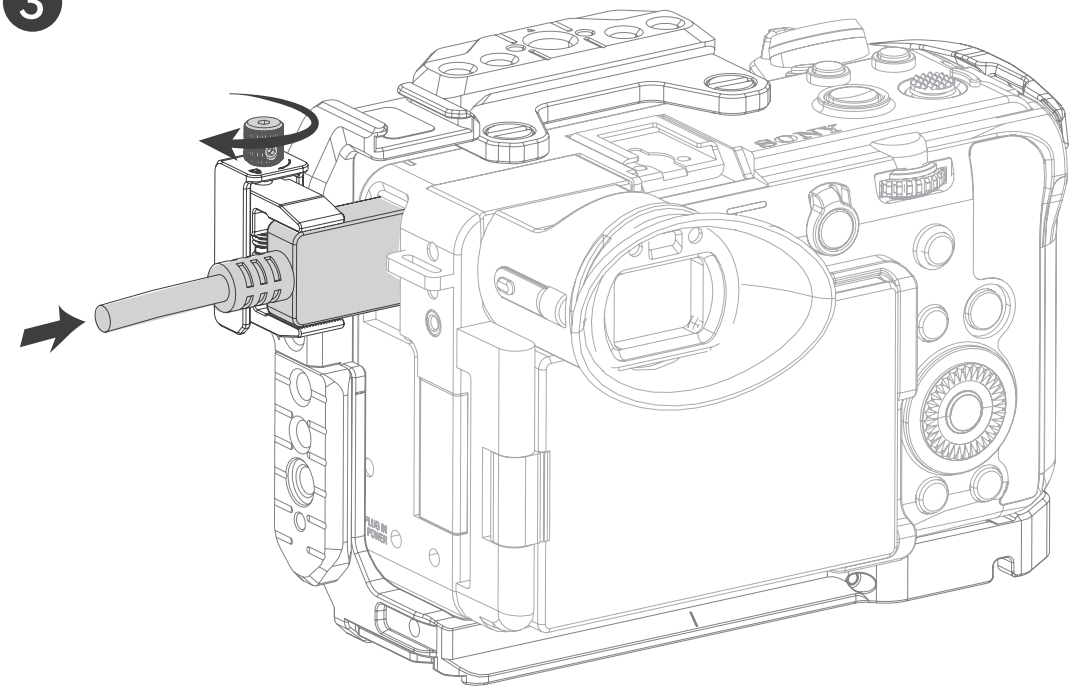

Guarantee Card | 保修卡

ID No. ID 编号	
Item Name 产品名称	
Purchase Date 购买日期	
User Name 用户姓名	
Mobile 用户电话	
Address 用户地址	
Receipt 购买单据	

Service & Warranty

Please keep your original receipt and guarantee card. Be sure the dealer has written on it the date of purchase and SN of the product. These are required for warranty service.

After-sale Warranty Terms

SmallRig products are entitled to warranty services as of the date of payment.

• Electronic products (except V mount battery): 1-year warranty.

• V mount battery: 2-year warranty.

• Non-electronic products: 2-year warranty.

Note: In case of any conflict between our warranty period policy and applicable laws and regulations of the country / region where the products are sold, the latter shall prevail.

This Warranty Does Not Cover

1. If users fail to adhere to the "Operating Instruction" or any "Warnings" stated in the user manual, resulting in a quality failure, it falls outside the scope of warranty coverage.
2. The product identification or SN label is removed or defaced in any way.
3. Product damage caused by problems not attributable to the quality of the products such as improper use of the products.
4. Product damage caused by unauthorized modification, disassembly, repair and other acts.
5. Product damage caused by fires, floods, lightning and other force majeure factors.

Warranty Mode

• For the products within the scope of warranty, SmallRig will repair or replace them on the basis of specific failures; the repaired / replaced products / parts are entitled to the remaining part of the original warranty period.

Contact Information

• You're advised to contact the online customer service personnel of corresponding shopping platform and submit a repair service application.

• You may also apply for repair service through SmallRig's service email.

Service Email: support@smallrig.com

保修条款

请保留您的原始购买单据及保修卡，同时包含您的购买日期、产品序列号等，这些资料质保服务时均需要提供。

售后质保条款

SmallRig产品自下单付款之日起享有质保服务。

· 电子产品 (除V口电池): 1年质保。

· V口电池：2年质保。

· 非电子产品：2年质保。

注：若销售地国家或地区的适用法律法规有冲突的，以销售地国家或地区有关质保期的法律法规为准。

质保无效说明

1. 当用户违反操作指引或用户手册中“重要提示”任何一条导致的质量失效，不在质保范围内。
2. 产品序列号标识已经被撕毁或无法辨识，不在质保范围。
3. 产品使用不当等非产品本身质量问题，而造成的产品损坏，不在质保范围。
4. 非官方指导的私自改装、拆解、维修等行为而造成的损坏，不在质保范围。
5. 因火灾、水灾、雷击等不可抗拒力造成的产品损坏，不在质保范围。

维修方式

• 属于质保范围的，SmallRig 根据产品具体的故障对产品进行维修或更换；维修后的产品 / 部件享受原有保修期的剩余时长。

联系方式

• 建议您优先前往相应购买平台联系在线客服，提出产品维修申请。

• 您也可以通过 SmallRig 服务邮箱申请维修服务。

服务邮箱：support@smallrig.com

WE ARE HERE FOR YOU
服务与支持

ETICHETTATURA AMBIENTALE
ENVIRONMENTAL LABELING

Manufacturer Email: support@smallrig.com
Manufacturer: Shenzhen Leqi Innovation Co., Ltd.
Add: Rooms 101, 701, 901, Building 4, Gonglianfuji Innovation Park, No. 58, Ping'an Road, Dafu Community, Guanlan Street, Longhua District, Shenzhen, Guangdong, China.

制造商：深圳市乐其创新股份有限公司
地址: 中国广东省深圳市龙华区观澜街道大富社区平安路58号共联富基创新园4栋101、701、901

Consignor: Shenzhen LC Co., Ltd.
Add: Room 201, Building 4, Gonglianfuji Innovation Park, No. 58, Ping'an Road, Dafu Community, Guanlan Street, Longhua District, Shenzhen, Guangdong, China.

委托商: 深圳市乐长科技有限公司
地址: 中国广东省深圳市龙华区观澜街道大富社区平安路58号共联富基创新园4栋201

EC REP GAVIMOSA CONSULTORIA, SOCIEDAD LIMITADA, CASTELLANA 9144, 28046 Madrid, compliance.gavimosa@outlook.com

UK REP Sea&Mew Accounting Ltd, Electric Avenue Vision 25, London, Enfield EN3 7GD, info@seamew.net

执行标准：GB/T 26572-2011

LQ-P1543-18

RoHS CE

22
PAP

FR
LE TRI FACILE
Boîte 1 + Papier 5
BAC DE TRI

Séparez les éléments avant de trier

合格证
已检验

RECICLA
Al Azul

Made in China | 中国制造