SmallRig

L-Shape Mount Plate with Wooden Handle
(for FUJIFILM X-M5)

木头L型手柄（适用于富士 X-M5）

(5260 / 5261)

Operating Instruction / 操作指引

· Thank you for purchasing SmallRig's product.
感谢您购买 SmallRig 产品。

· Please read this Operating Instruction carefully.
使用本产品之前，请仔细阅读操作指引。

· Please follow the safety warnings.
请注意所有警告提示并遵循使用操作指引的所有指令。

In the Box / 包装清单

L-Shaped Grip L型手握	× 1	Shutter Release Button 快门按钮	× 1	Hot Shoe Cover 热靴盖	× 1
Windshield 防风毛套	× 1	Guarantee Card 保修卡	× 1		

Product Details / 产品介绍

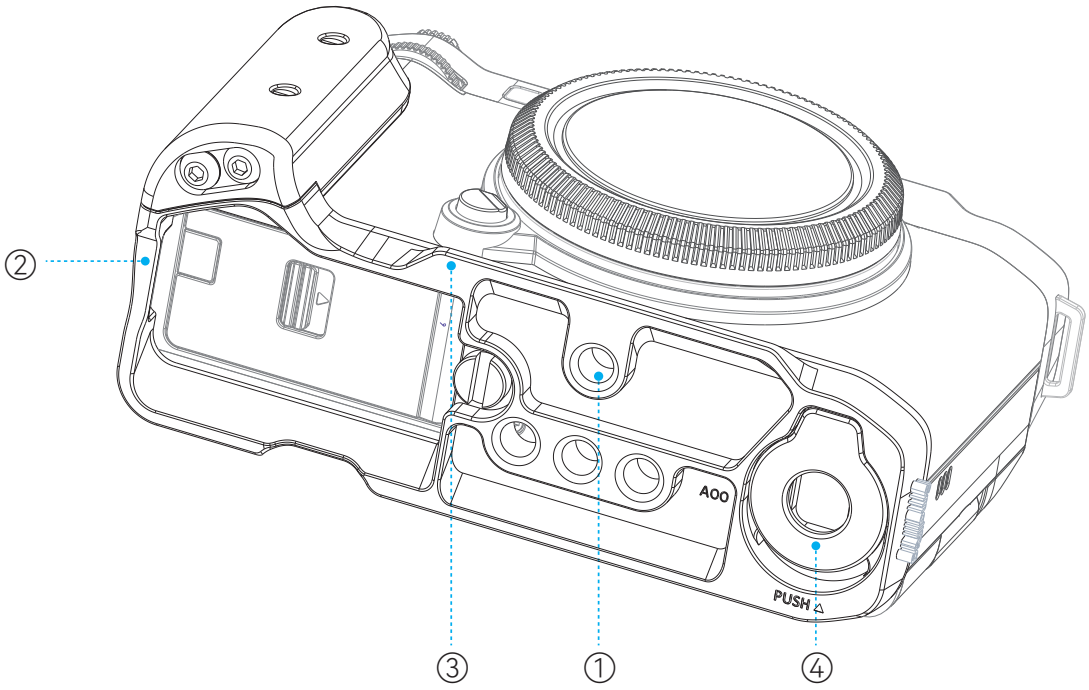

① 1/4"-20 Threaded Hole
1/4"-20 螺纹孔

② Strap Slot
肩带/腕带接口

③ Arca-Swiss Plate
阿卡规格快装板

④ Flat-Head Wrench
一字扳手

L-shaped Grip Installation
L型手握安装步骤

（1）

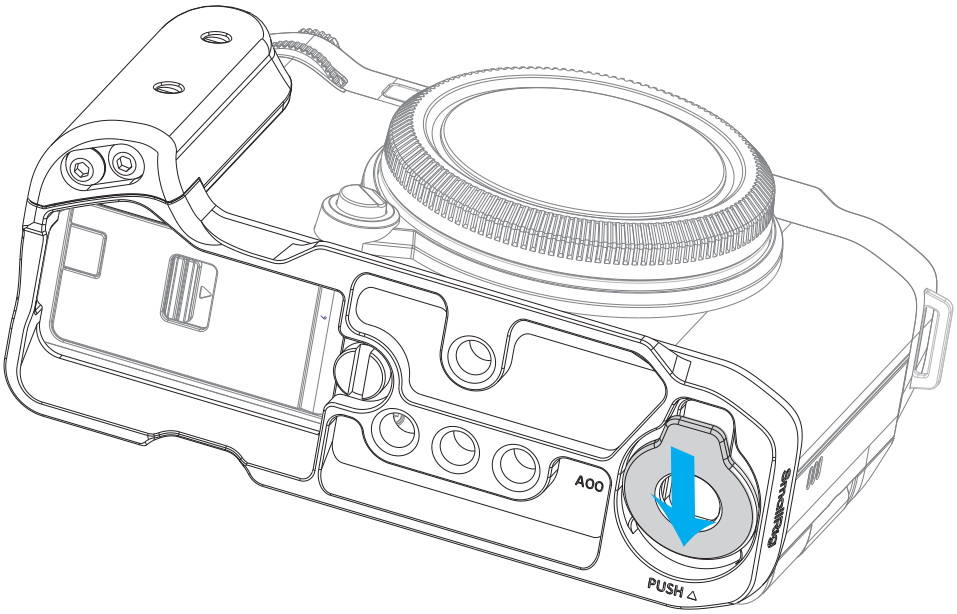

*Push / 按压

* The package does not include the camera.
* 相机机身需另购

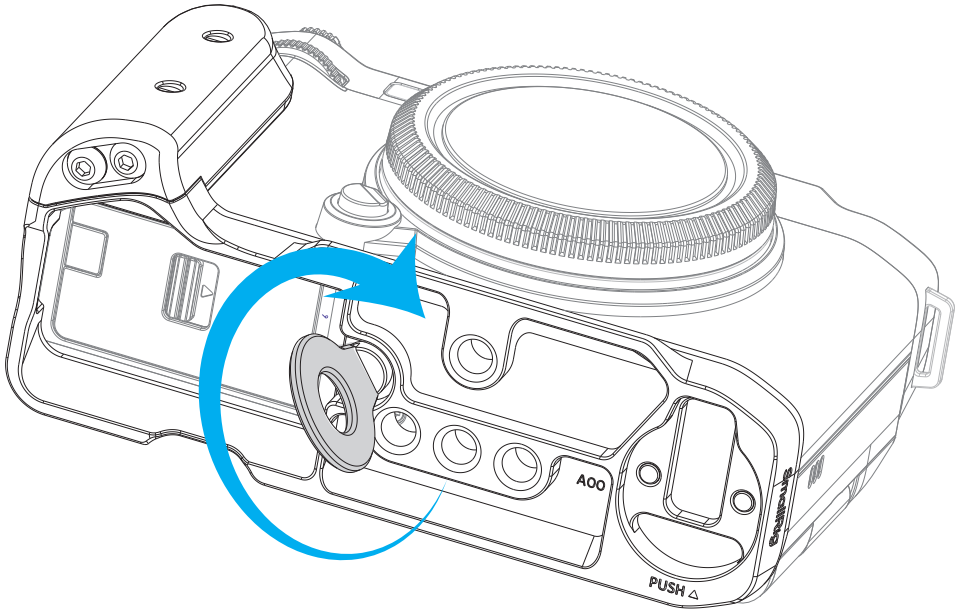

* The package does not include the camera.
* 相机机身需另购

Hot Shoe Cover and Shutter Release Button Installation
热靴盖和快门按钮安装步骤

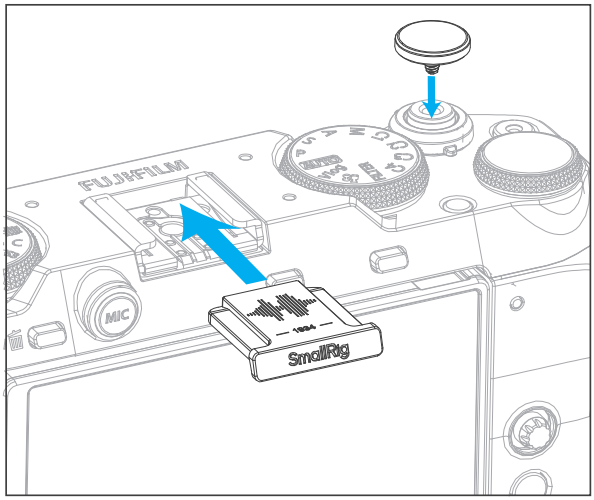

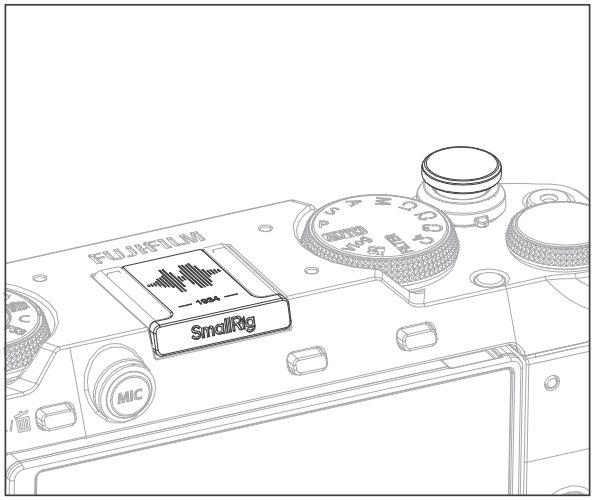

Windshield Installation
防风毛衣安装步骤

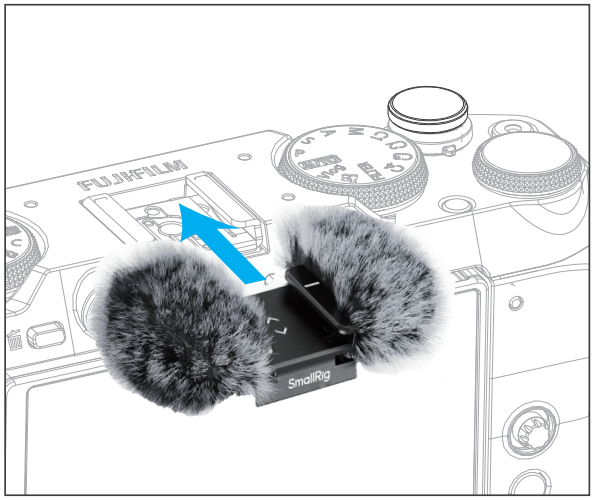

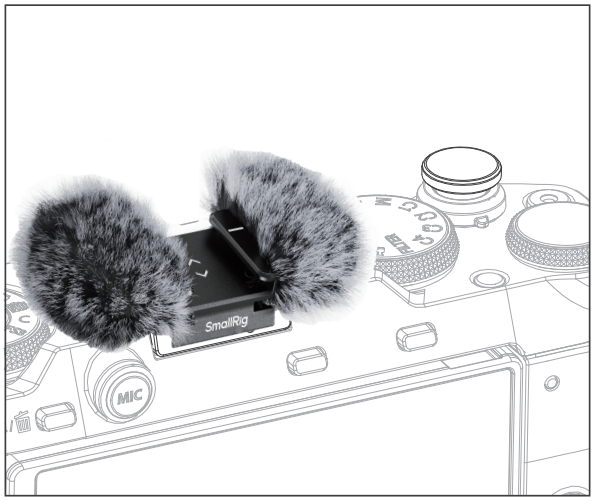

Specifications / 产品参数

Product Dimensions 产品尺寸	4.5 × 1.9 × 2.1in 114.0 × 47.6 × 54.0mm
Product Weight 产品重量	1.6 ± 0.2oz 46.0 ± 5.0g
Material(s) 主要材质	Aluminum Alloy, Wood 铝合金、木头

* Compatibility / 兼容性：FUJIFILM X-M5 / 富士X-M5

* 技术参数如有改动，以实物为准，恕不另行通知。
Specifications subject to change without prior notice. Please refer to the physical product for the most up-to-date information.

Manufacturer Email: support@smallrig.com
Manufacturer: Shenzhen Leqi Innovation Co., Ltd.
制造商: 深圳市乐其创新股份有限公司
Add: Rooms 101, 701, 901, Building 4, Gonglianfuji Innovation Park, No. 58, Ping'an Road, Dafu Community, Guanlan Street, Longhua District, Shenzhen, Guangdong, China.
地址: 中国广东省深圳市龙华区观澜街道大富社区平安路58号共联富基创新园4栋101、701、901

Consignor: Shenzhen LC Co., Ltd.
委托商：深圳市乐长科技有限公司
Add: Room 201, Building 4, Gonglianfuji Innovation Park, No. 58, Ping'an Road, Dafu Community, Guanlan Street, Longhua District, Shenzhen, Guangdong, China.
地址: 中国广东省深圳市龙华区观澜街道大富社区平安路58号共联富基创新园4栋201

执行标准：GB/T 26572-2011

RoHS CE

22
PAP

FR
LE TRI FACILE
Boîte 1 + Papier 5
BAC DE TRI
Séparez les éléments avant de trier

中国制造
Made in China

合格证
已检验

RECICLA
Al Azul